NATIONAL HIGH MAGNETIC FIELD LABORATORY

32T Superconducting Magnet VTI Cylinder Rotator Probe
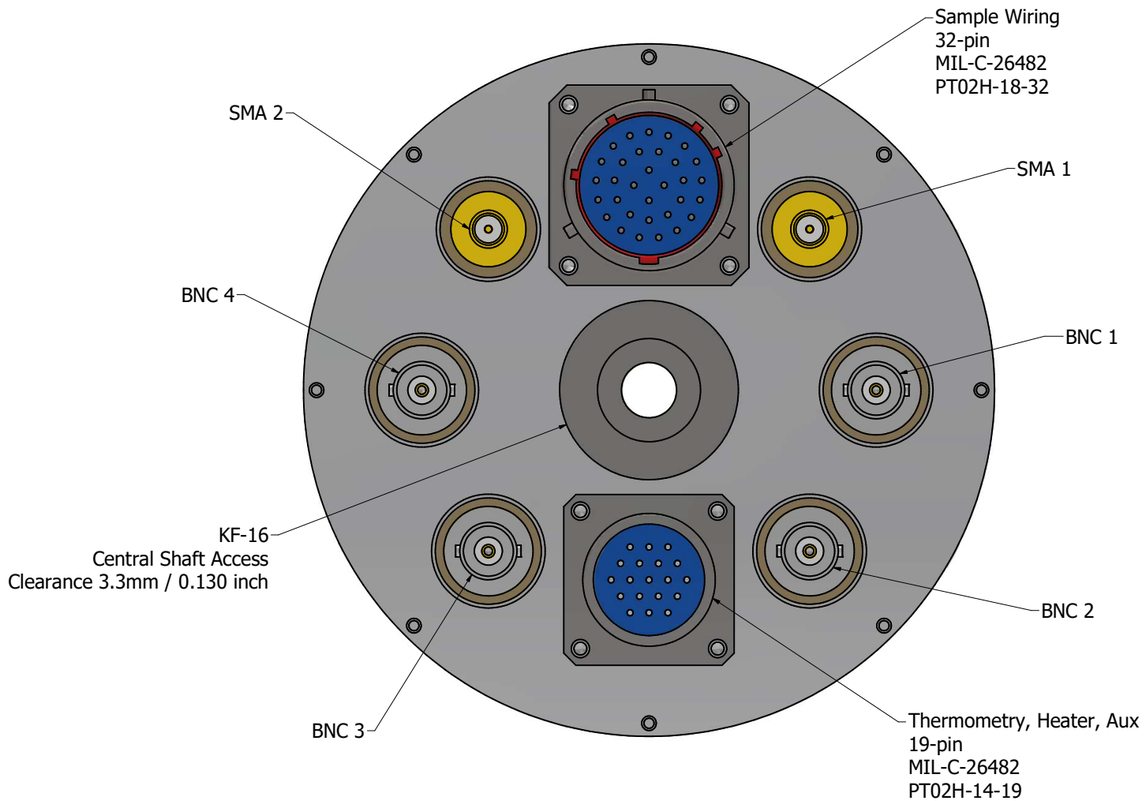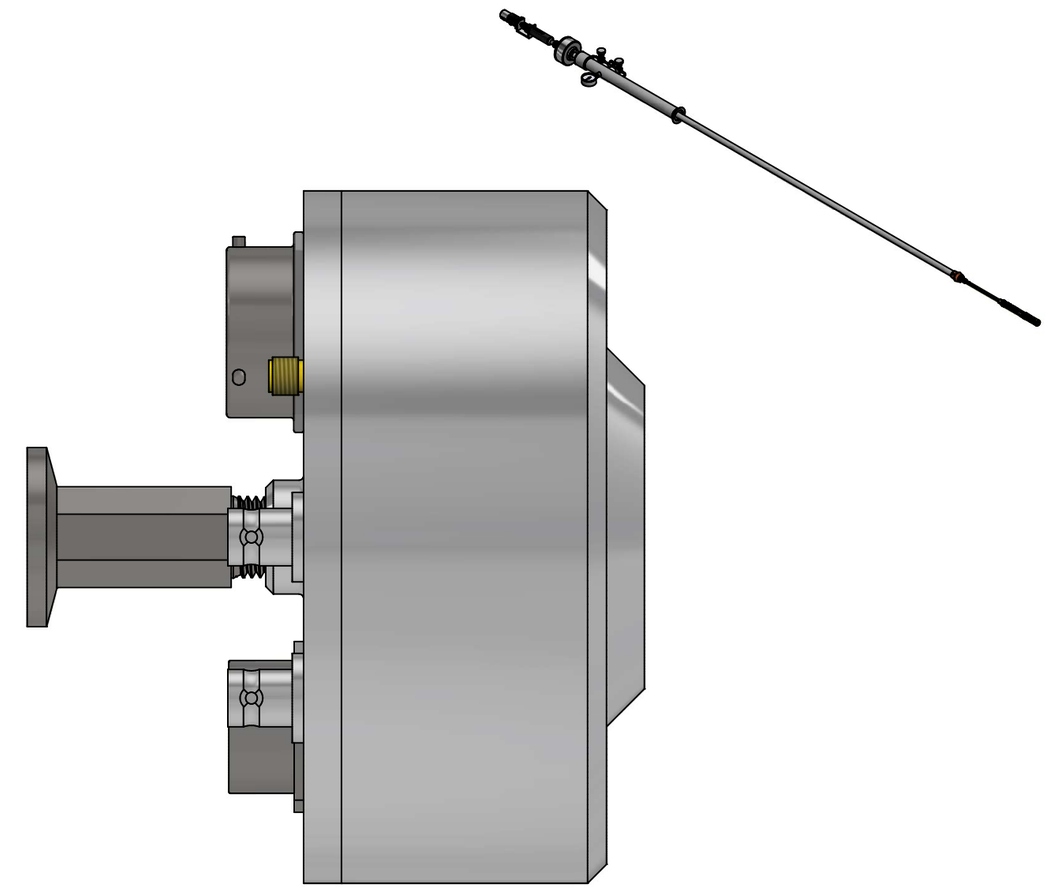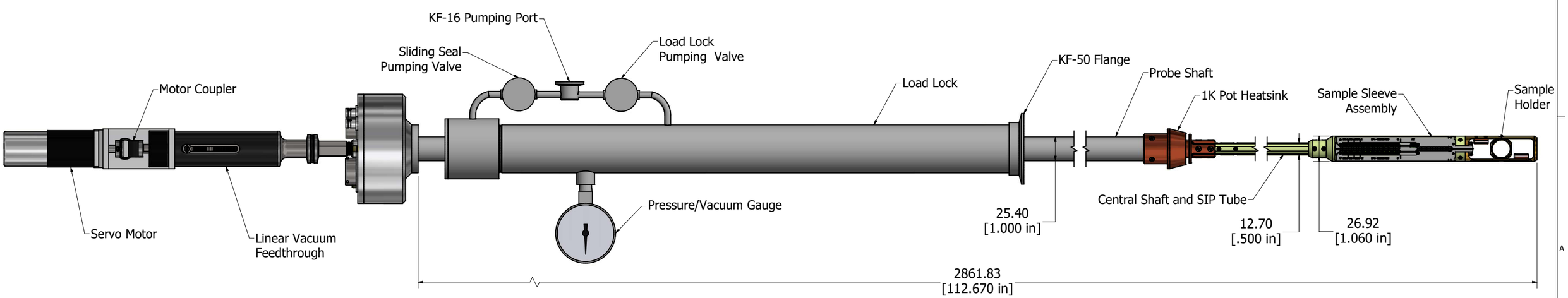
Units = mm [inch]